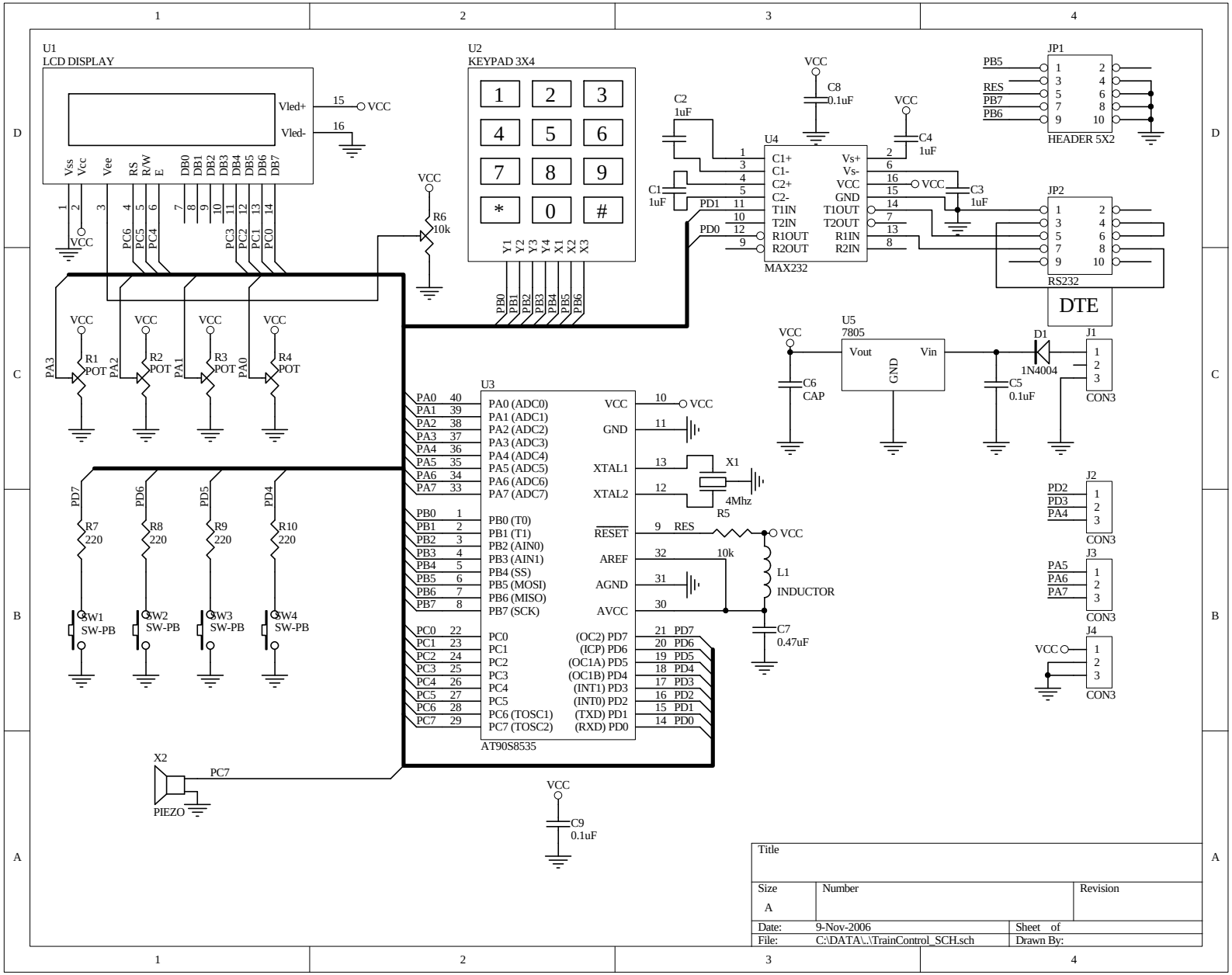
U1
LCD DISPLAY
Vled+
Vled-
Vss Vcc Vee RS R/W E DB0 DB1 DB2 DB3 DB4 DB5 DB6 DB7
U2
KEYPAD 3X4
1 2 3
4 5 6
7 8 9
* 0 #
Y1 Y2 Y3 Y4 X1 X2 X3
PB0 PB1 PB2 PB3 PB4 PB5 PB6
U4
MAX232
C1+ C1- C2+ C2- T1IN T2IN R1OUT R2OUT
Vs+ Vs- VCC GND T1OUT T2OUT R1IN R2IN
C1 1uF
C2 1uF
C3 1uF
C4 1uF
C8 0.1uF
JP1
HEADER 5X2
JP2
RS232
DTE
U5
7805
Vout Vin GND
C5 0.1uF
C6 CAP
D1 1N4004
J1
CON3
U3
AT90S8535
PA0 (ADC0) PA1 (ADC1) PA2 (ADC2) PA3 (ADC3) PA4 (ADC4) PA5 (ADC5) PA6 (ADC6) PA7 (ADC7)
PB0 (T0) PB1 (T1) PB2 (AIN0) PB3 (AIN1) PB4 (SS) PB5 (MOSI) PB6 (MISO) PB7 (SCK)
PC0 PC1 PC2 PC3 PC4 PC5 PC6 (TOSC1) PC7 (TOSC2)
VCC GND XTAL1 XTAL2 RESET AREF AGND AVCC
(OC2) PD7 (ICP) PD6 (OC1A) PD5 (OC1B) PD4 (INT1) PD3 (INT0) PD2 (TXD) PD1 (RXD) PD0
X1 4Mhz
R5 10k
L1 INDUCTOR
C7 0.47uF
C9 0.1uF
R1 POT
R2 POT
R3 POT
R4 POT
R6 10k
R7 220
R8 220
R9 220
R10 220
SW1 SW-PB
SW2 SW-PB
SW3 SW-PB
SW4 SW-PB
X2
PIEZO
J2
J3
J4
Title
Size A
Number
Revision
Date: 9-Nov-2006
Sheet of
File: C:\DATA\..\TrainControl_SCH.sch
Drawn By: