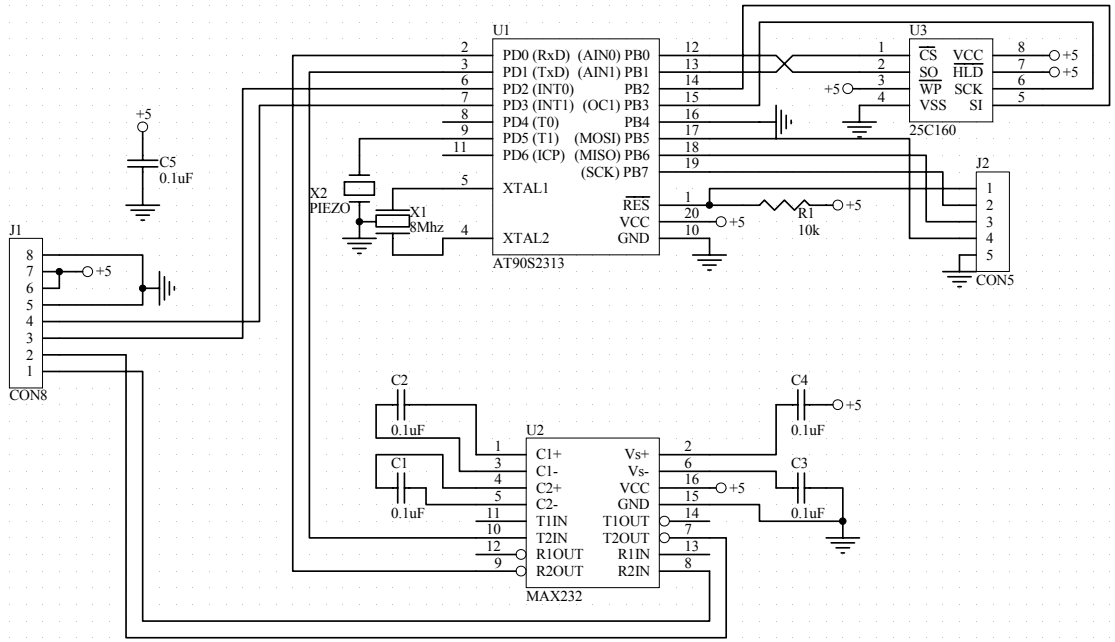

Title		
Size A	Number	Revision
Date: 7-Feb-2003	Sheet of	
File: C:\DATA\CueCat\SCH & PCB\CUECAT.SCH	Drawn By:	